Cool Touch™ 050 Inline Air Heater

Safe, Compact Heating for Low-to-Moderate Airflow Applications

MADE IN THE **USA**

The **Cool Touch™ 050** is a compact, high-performance inline air heater designed for applications requiring high outlet temperatures with a cool, safe-to-touch exterior. Its 1.0" (25.4 mm) diameter and advanced **triple-pass airflow design** route incoming air along the outer shell before reaching the heating element, significantly reducing surface temperature and simplifying operator protection and enclosure requirements.

Internally, the heater is engineered to store and stabilize thermal energy, allowing it to reach setpoint quickly and maintain steady output during cycling or variable airflow conditions. This ensures consistent, repeatable heating performance in processes where tight thermal control is critical. Supporting up to 7.5 SCFM, delivering exhaust **temperatures up to 1300°F (704°C),** and offering wattages up to 500 W, the Cool Touch™ 050 fits demanding precision-heating tasks in a minimal footprint.

MAX WATT	MAX INLET	MAX EXHAUST	MIN SCFM	MAX SCFM	PSIG*
500 W	250º F	1300º F	1	10	120

Key Features & Benefits

Triple-Pass Safety Design

Air passes through three internal paths, cooling the exterior while maximizing internal heat storage.

Fast Temperature Stabilization

Output temperature quickly reaches setpoint and stays consistent — excellent for heat-cycling applications.

High Thermal Efficiency

Less heat lost to the environment; more delivered to your process.

Compact Stainless-Steel Build

Durable construction for long life in lab, OEM, and industrial environments.

Simple Integration

Horizontal or vertical mounting, stainless-steel fittings, and 20-gauge leads.

Process Monitoring Options

Thermocouples and conduit accessories available for closed-loop control.

Wattage and Voltage Options

120V, single phase, 0.1kW-0.5kW

240V, single phase, 0.2kW-0.6kW

Specifications

Mounting.....Horizontal / Vertical

Leads.....20 AWG, 12" Long

Heater Body.....Stainless Steel

Inlet Fittings.....Stainless Steel

Exhaust Fittings.....Stainless Steel

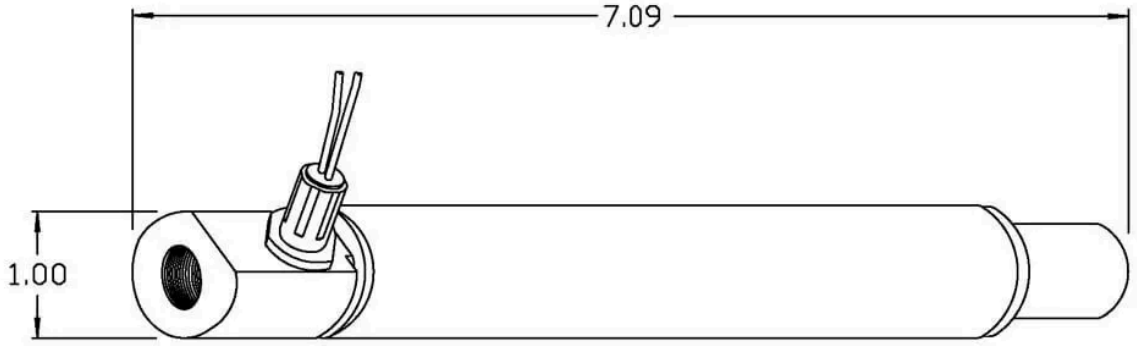

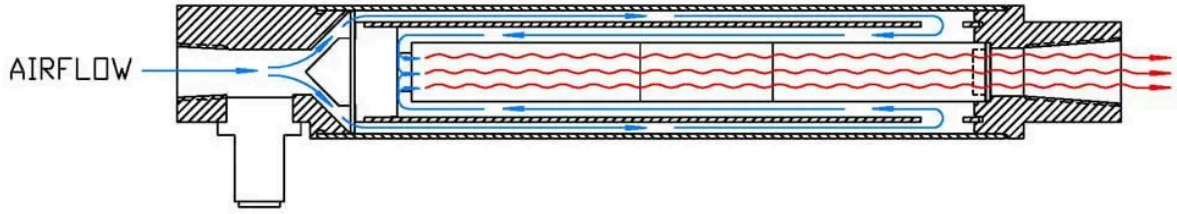

Ready to Build Your Solution?

Request a Quote or Contact our Applications Engineers to learn how a Cool Touch™ heater can improve your process consistency, energy efficiency, and thermal performance.

Applications

Cool Touch™ inline heaters are engineered for high-temperature performance in environments where operator proximity, comp exposed tooling require low external temperatures. Their insulated, triple-pass design enables precise, focused heat delivery w cool enough for safe handling and integration.

Staking and Heat Forming – Apply precise heat to small thermoplastic components for staking, forming, or assembly in pro environments.

Curing Coatings and Adhesives – Deliver uniform heat to cure adhesives, coatings, and films with consistency, improving bo reliability.

Adhesive Activation – Activate pressure-sensitive or heat-activated adhesives in small components, packaging, or electronic

Drying Processes – Efficiently dry materials, coatings, or parts with controlled airflow, reducing process times and improving

Heat Shrinking – Shrink tubing or wrap materials accurately around components without damaging surrounding areas. Ster temperature airflow for sterilizing laboratory instruments, packaging, or medical components, particularly in small-scale or b

Adhesive activation – Improve bond performance by applying uniform heat to tapes, films, or structural adhesives.

Laboratory Research and Testing – Deliver precise thermal input for material studies, prototype testing, and experimental setups requiring controlled air heating.

OEM and Production Line Integration – Compact, reliable heating for assembly systems, automated stations, or modular equipment requiring localized, repeatable heating.

Prototype Development and Process Optimization – Ideal for engineers and researchers developing or refining thermal processes, allowing for fast iterations and adjustments.

Electronics Rework and Soldering Support – Focused airflow is suitable for de-soldering, reflow, or delicate thermal applications on small electronic components.

Material Conditioning and Preheating – Preheat components before bonding, forming, or processing, ensuring consistent quality and minimizing thermal shock.

The Cool Touch™ 050's combination of high exhaust temperatures, operator-safe external surfaces, and compact, triple-pass design makes it an exceptional choice for precision heating tasks across laboratory, industrial, and OEM environments. Its ability to deliver consistent, high-performance heat while minimizing external temperature and energy loss enables users to achieve safe, reliable, and repeatable results in applications where accuracy and efficiency are essential.

Advantages Over Conventional Heaters

The Cool Touch™ 050 provides several key advantages that set it apart from traditional small air heaters and hot air tools:

Lower Surface (Skin) Temperature – The triple-pass design uses inlet air to cool the outer housing, which reduces radiant h
Improved Thermal Efficiency – Heat that might otherwise be lost is better retained through multiple air passes.

Better Process Control – High internal thermal storage enables rapid stabilization of outlet temperature and more consisten
Durability & Serviceability – Field-replaceable elements (in some triple-pass heaters) help reduce downtime when maintena
Energy Savings – Because the triple-pass setup maximizes heat transfer and minimizes losses, it can be more energy-efficie

Why Choose TUTCO Farnam Cool Torch™ 050 Heaters?

The Cool Touch™ series represents a smart balance between performance, safety, and process control. By combining powerfu heaters are ideal for environments where operator safety, compact design, and repeatable thermal cycles matter. Whether you scale industrial production, the Cool Touch™ heater line provides reliable, efficient heating with minimal compromise.

Resources

BROCHURES
Cool Touch™ 050

MANUALS
Quickstart Guide

DRAWINGS
3D STP 1/8"F-1/4"-TF2 (ID 13846)
3D STP 1/8"F-1/4"-TF2
3D STP 1/8"F-1/4"-X
Dimensional Drawing

VIDEOS
Product Demonstration
Process Heaters

Additional Information

PRODUCT FITTINGS +

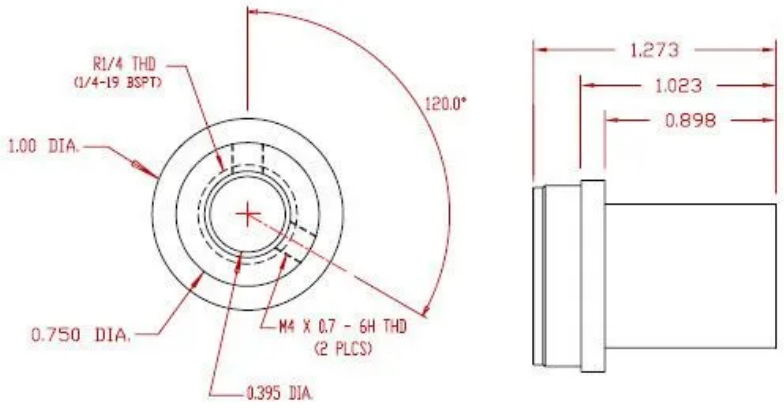

Exhaust Fitting. R1/4=1/4-19 BSPT female

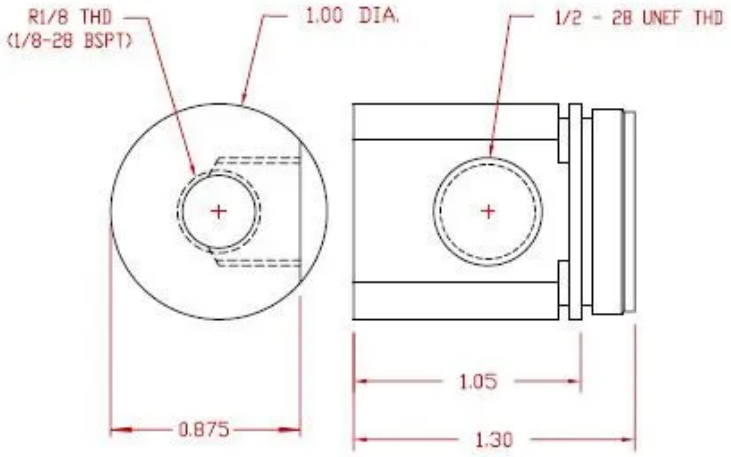

Inlet Fitting. R1/8=1/8-28 BSPT female