FT400 LG 2F-2F-TF1

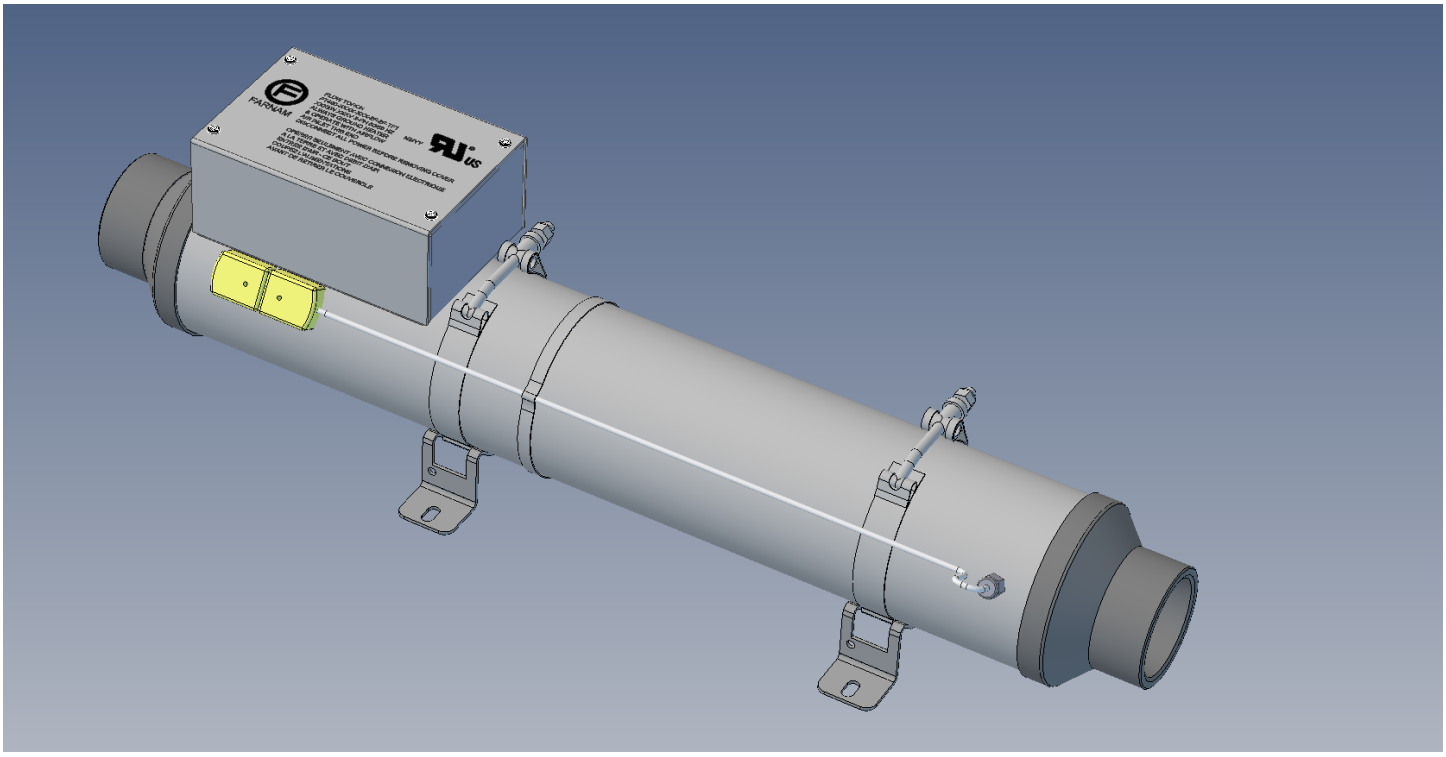

This model can be viewed as a 3D model if opened in Adobe Reader. Simply click the object once - and then rotate, zoom, and pan to explore!